Instruction Manual

OMEGA®

Chromega B Dichroic Lamphouse

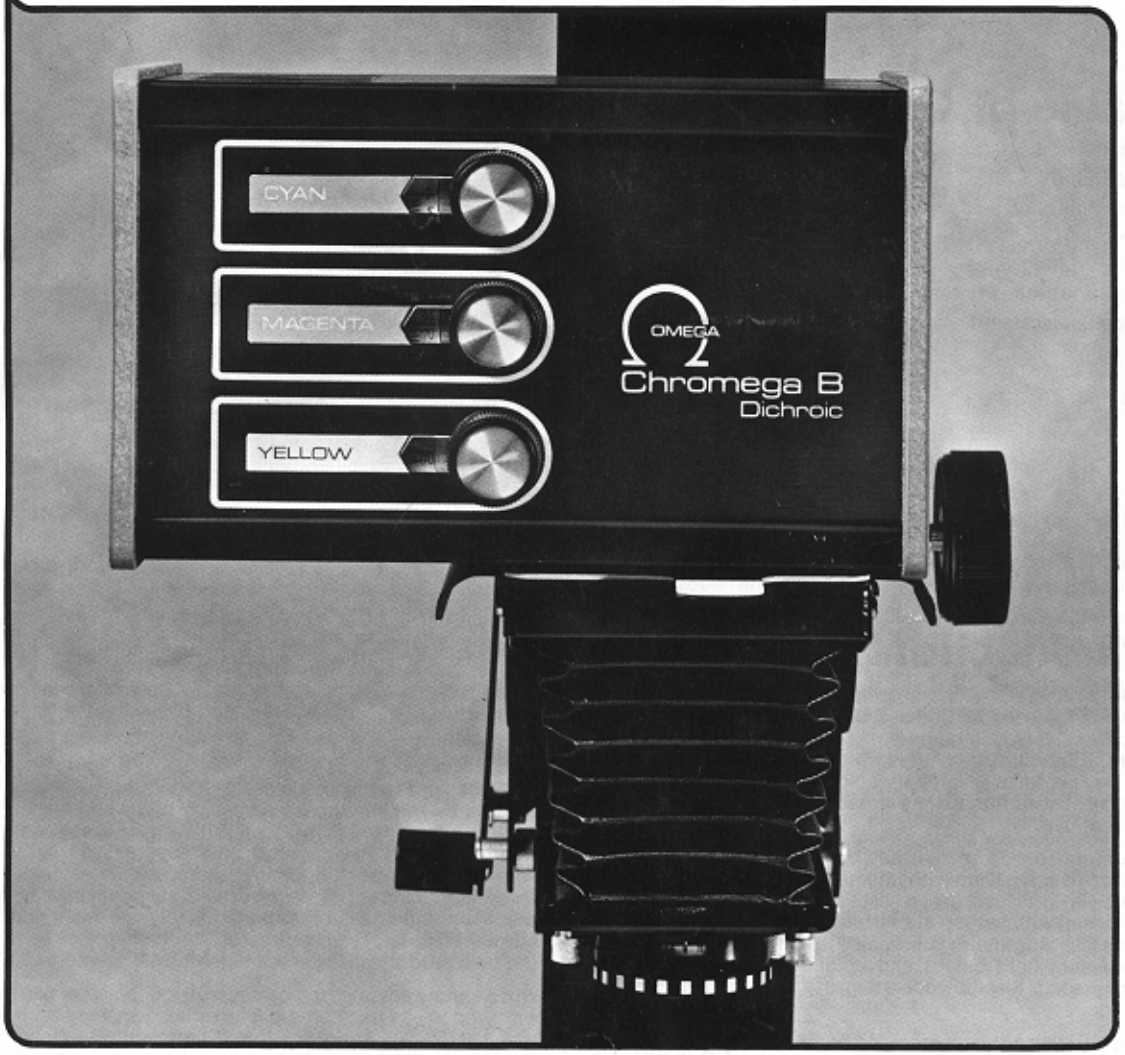

Preface

Thank you for selecting a Chromega B Dichroic lamphouse. We are confident that it will serve you well. As an Omega owner you are cordially invited to call or write to us for photographic advice or assistance. Moreover, we welcome your comments and suggestions. Our staff of darkroom experts is ready to supply any information you may require to obtain the best possible results in your darkroom.

Please be sure to fill out and mail the registration card immediately, so that your purchase can be recorded.

Because Omega is dedicated to a policy of continuous product improvement and review, specifications are subject to change without notice.

Omega Division
BERKEY MARKETING COMPANIES

Table of Contents

Introduction

The Chromega B dichroic lamphouse is adaptable to any Omega B-66, B-600, Concept Six, or B22 enlarger chassis. It offers a filtration range of 0-170cc's through the use of special dichroic glass filters which produce very pure color in the "subtractive" primary colors of cyan, magenta, and yellow. These filters are permanent, and will not fade in normal use.

Illumination is provided by a 75 watt, 27 volt quartz-halogen lamp with integral reflector. Voltage to the lamp is provided by a separate power transformer, available with either stabilized or unstabilized output. Quartz-halogen lamps typically produce extremely consistent light output and color temperature, and are designed to have an operating life of approximately 50 hours.

The filtration adjustment controls are color coded, and the three reference scales are illuminated and magnified, with indicated increments of 1 cc. A positive zero position detent secures the unused filters to prevent unwanted "neutral density". Both infrared and ultra-violet filtration are built-in.

In addition to its suitability for color printing from negatives and transparencies, the full light diffusion provided by the lamphouse design is often preferred for black and white printing. Dust, scratches, and imperfections in the negative are "suppressed" by the diffused light, yet full image sharpness is obtained. Equivalent contrast to that provided by a condenser light source is obtained by using approximately one paper grade "harder" material. The filters built into the lamphouse can also be used for variable contrast equivalencies.

With a simple adapter, the carriage of your enlarger can be converted to use most single lens reflex cameras for copy work. And by inverting the Chromega B dichroic lamphouse on the baseboard, you have an ideal slide duplication system with full color control.

Unpacking

Carefully unpack the equipment, check all items against the packing list enclosed. Do not discard packing material until you have accounted for all components and mounting hardware. We suggest that you save the cartons for possible future use.

The Chromega B dichroic lamphouse is adaptable to various enlarger chassis: B-600, Concept Six, B-66, and B-22. The mounting hardware supplied with the lamphouse is for use with B-66 and B-22 chassis only, and is not required for B600 chassis. When mounting on B-600 or Concept Six chassis, a separate adapter kit, #429-064, is required.

If you are installing your Chromega B dichroic lamphouse onto an enlarger chassis that you already own, remove the condenser lamphouse assembly from the carriage first, before attempting to install the dichroic lamphouse. Be sure to carefully pack away the condenser lamphouse for possible future use.

Assembly

Installation of B-66 or B-22 chassis.

1. Lower the carriage assembly to convenient working height, and lock the carriage by tightening the locking knob.

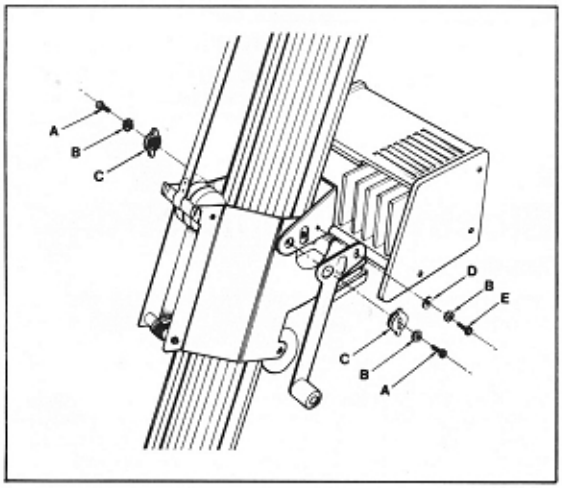

2. Position the lamphouse onto the film stage by slightly spreading the mounting arms at the rear of the lamphouse, so that they slide over the phillips head screws at the top of the carriage side plates. These phillips head screws should be within the oval cut-outs of the mounting arms when the lamphouse is in proper position.
3. Install the right side mounting hardware, consisting of a knurled screw, star washer, and tab mounting bushing. Only tighten loosely.
4. Position the lifting lever arm on the left side, and use the slotted screw, star washer, and flat washer in combination to make up the lifting arm adjustment assembly, and install into the tapped hole at the front of the lamphouse mounting arm. Do not tighten.
5. Install the remaining knurled screw, star washer, and tab mounting bushing into the left side, through the lifting arm and mounting arms. Do not tighten.

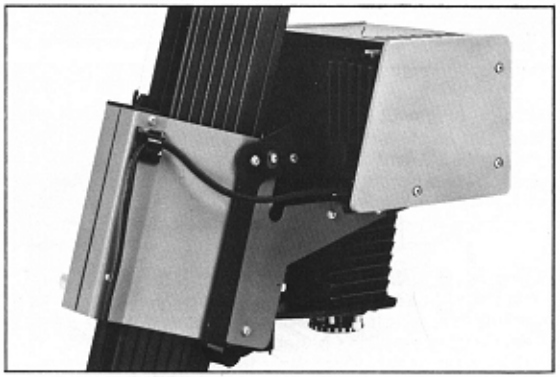

6. Move the lifting lever arm so that the lifting lever mounting screw is approximately centered in the oval cut-out in the arm, and tighten the screw. This adjustment controls the amount of lamphouse lift, and can be changed as desired.

7. Place a negative carrier into the film stage of the enlarger. With your fingers, rotate the tabbed mounting bushing until they are approximately vertical. Then align the lamphouse as follows:
   a. Plug the lamphouse polarized line cord into the back of the power supply, and plug the power supply into a convenient receptacle. Then turn on the lamphouse.
   b. Adjust the lamphouse so that the light seal at the bottom contacts the negative carrier squarely, without appreciable light leaks. Then simply tighten the knurled mounting screws, and turn off the lamphouse.

Assembly

Mounting The Dichroic Lamphouse Onto B-600 or Concept Six Chassis

NOTE: If you have purchased a complete Chromega B-600 or Concept Six color enlarger, the chassis is supplied with the lamphouse mounting adapters installed. However, if you are fitting a dichroic lamphouse to a B-600 or Concept Six condenser enlarger, you must obtain and install the adapter kit (Catalog Number 429-064).

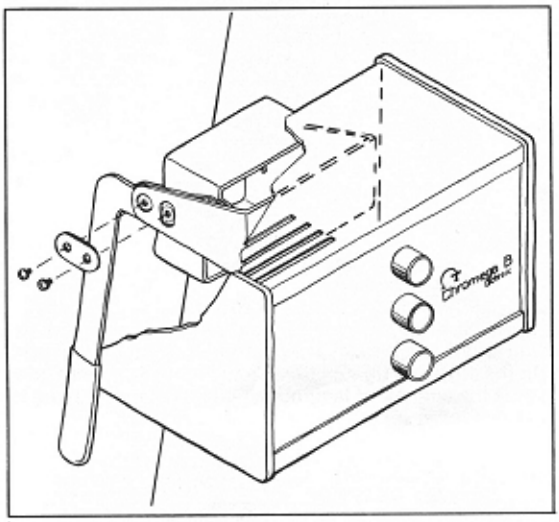

Before mounting the lamphouse, note the following: A set of black adapter plates is fitted to the parallel lifting levers of the enlarger chassis. The looseness of these plates is normal, since they "float" until the lamphouse is installed. Therefore, do not try to further tighten the stainless steel plate mounting screws securing these plates to the lifting levers. Be sure you have the two oval lamphouse retainers and the four black Phillips head screws which are supplied in a poly-bag with the enlarger.

Position the Dichroic Lamphouse on the negative stage so that the holes in the lamphouse mounting ears align with the tapped and embossed holes of the mounted adapter plates. Holding the Lamphouse steady with one hand, use the other to insert the Phillips head screws through the oval plates and start them with your fingers into the adapter plates and tighten one screw and one side at a time. When all four screws are in place, turn them down fingertight and then back them off slightly so that you can align the lamphouse.

Aligning The Lamphouse

Plug the lamphouse cord into the rear of the power supply and connect the power supply to an outlet. Turn the enlarger on and, with a negative carrier in place, adjust the lamphouse so that the light seal at the bottom squarely contacts the top of the carrier. Check that the lamphouse appears level at the front and then fully tighten the four Phillips head lamphouse mounting screws. Turn the lamphouse off. Route the lamphouse cord neatly at the rear and secure the cord under the retaining clamp at the side of the carriage assembly.

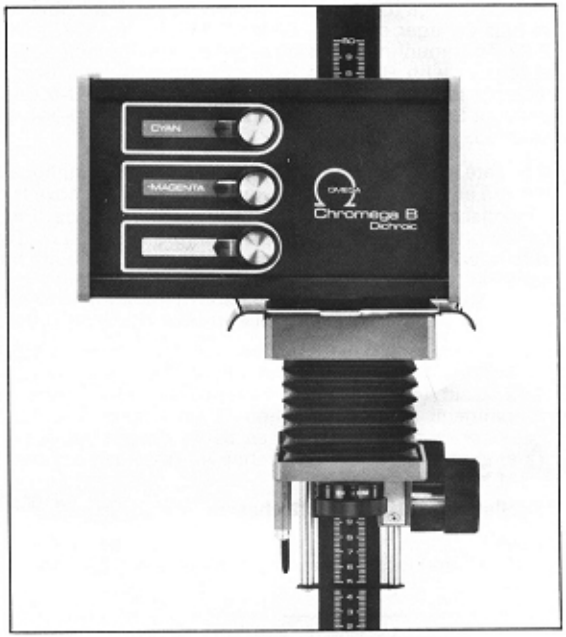

Electrical Connections

CONNECTING TIMERS

Any accurate enlarging timer can be used with these enlargers. For color printing, and for optimum accuracy and convenience, an electronic timer such as the Omega E99 Electronic Timer (Cat. No. 461-020) is suggested.

You may also use the Omega 60-second enlarging timer (Cat. No. 461-027). Full instructions are provided with these timers. If you are using any other timer, merely plug the line cord from the enlarger into the socked marked "Enlarger."

With the Chromega B, we strongly recommend the use of a Voltage Stabilized Power Supply, Catalog Number 412-030. The use of a stabilizer prevents variations in printing due to line voltage fluctuations. If the Stabilized Power Supply was not purchased with the Chromega B, we suggest the use of a voltage stabilizer such as our 75W stabilizer (Catalog Number 404-875). The line cord from the power supply is merely plugged into the stabilizer and the stabilizer is in turn plugged into the timer. The timer is then plugged into any 120V, 60Hz. outlet.

INSTALLATION INSTRUCTIONS

The Voltage Stabilized Power Supply and the standard unit are installed by connecting the lamphouse cord to the polarized receptacle and plugging the line cord into an enlarging timer. A low level hum is characteristic of regulators of this type.

THE NEED FOR VOLTAGE STABILIZATION

"Brown Outs," or line voltage fluctuations are extremely common in many areas and are usually the result of peak demand periods such as the extensive use of air conditioners during hot summer days, etc.

If you happen to be using your enlarger while the line voltage is fluctuating, the light output and color temperature of the enlarger lamp will vary. While the effects of this may not be noticeable in black and white printing, it can cause serious problems when printing color. Pronounced color shifts, exposure errors and a lack of consistency, even when using a color analyzer, can be the result. Experienced darkroom technicians are well aware of this and most of them consider the use of a voltage stabilizer mandatory.

WHAT IS A VOLTAGE STABILIZER?

A voltage stabilizer is a device that automatically monitors incoming line voltage and adjusts the output to a constant voltage. Although several types of stabilizers are commonly used, the most rugged and reliable design is based on the use of a ferro-resonant transformer. This type of stabilizer is extremely trouble-free, and operates with a high degree of precision. The optional voltage stabilized power supply available for the Chromega B Dichroic Lamphouse is of this design.

THE VOLTAGE STABILIZED POWER SUPPLY FOR THE CHROMEGA B DICHROIC

Although similar in appearance to the standard power supply, the voltage stabilized version not only steps down line voltage to the 27 volts required to energize the 75W quartz halogen lamp, but maintains this voltage despite widely fluctuating input from the power line.

Physically, the stabilized power supply is distinguished from the standard unit by its black finish, cooling slots on its sides and voltage stabilized nomenclature on its front panel. It is also heavier; weighing 5½ pounds as opposed to 3½ pounds for the standard power supply.

Electrically, it incorporates a regulation circuit that will compensate for incoming line voltage fluctuations within 95 to 130 volts. Thus, regardless of fluctuations, low voltage or high voltage anywhere within this range, the output of the power supply will remain constant within ±1%.

Color Printing

The steps required to make a good "balanced" color print from a negative or transparency vary greatly due to many factors, such as basic type and processing of film, brand, type and surface finish of paper, color chemistry, temperature and processing times and equipment, as well as the particular color lamphouse you are using. Therefore, it is impossible to give specific instructions in a manual of this type for making a print, and we suggest that you refer to the specific instructions provided with the paper and chemistries that you will be using for more information.

Setting Filtration

The Chromega B is equipped with filters in the three "subtractive" primary colors of cyan, magenta, and yellow, so that virtually any color negative or transparency can be printed. By using the proper combinations of two filters (usually magenta and yellow when printing color negatives), a "balanced" color print can be obtained by "trial and error."

Under most conditions, only two filter colors are used at one time, since using all three produces neutral density (gray), thereby prolonging exposure times unnecessarily. The chart on page 6 is intended to help you adjust the color balance and exposure of your test print to your taste.

Exposure Changes

As more filtration is introduced into the light path of the lamp, more exposure time is required to maintain an equivalent print density. A change of 10cc's in cyan or magenta filter values requires approximately a 10% change in the exposure to produce equal density; a change of yellow of 10cc's is equivalent to about a 2% density change. When changing two filter colors, add (or subtract) the sum of the required changes to produce equal density values.

Exposure Limitations

Color papers are made up of three separate layers of sensitized materials that produce the various colors on the print after processing. However, the sensitivities of these three layers are not the same at all exposure times. This can cause an alteration in the color balance of the print as exposure times change, and is particularly evident at times shorter than about six seconds. Therefore, whenever possible, exposure times should be between six and sixty seconds for best results. Use a smaller (or larger) f/stop when adjusting exposures if the change would result in an extremely short (or long) exposure time.

Using A Color Analyzer

Although trial and error printing, or test printing with a calculator (filter matrix) may be an acceptable method for beginning printers due to modest volume requirements, more serious color printers find that a color analyzer increases productivity and quality, and reduces waste. Once a basic filtration pack and exposure has been determined for a particular film type, on a particular batch of paper, with a particular processing technique, the use of an analyzer helps to determine the required filtration and f/stop without further testing, and allows for more creative time in the darkroom.

COLOR CORRECTION CHART

Print Excess	NEGATIVES		TRANSPARENCIES	
	Recommended	Alternate	Recommended	Alternate
Red	Add Magenta & Yellow	Subtract Cyan	Subtract Magenta & Yellow	Add Cyan
Green	Subtract Magenta	Add Cyan & Yellow	Add Magenta	Subtract Cyan & Yellow
Blue	Subtract Yellow	Add Cyan & Magenta	Add Yellow	Subtract Cyan & Magenta
Cyan	Subtract Magenta & Yellow	Add Cyan	Add Magenta & Yellow	Subtract Cyan
Magenta	Add Magenta	Subtract Cyan & Yellow	Subtract Magenta	Add Cyan & Yellow
Yellow	Add Yellow	Subtract Cyan & Magenta	Subtract Yellow	Add Cyan & Magenta
Too Dark	Close Lens	Decrease Exposure Time	Open Lens	Increase Exposure Time
Too Light	Open Lens	Increase Exposure Time	Close Lens	Decrease Exposure Time

Color Printing Accessories

Your Omega dealer will be happy to show your the coordinated Omega Color Printing Accessory Program, including color analyzers, color print dryers, and a full assortment of other aids for the darkroom.

Omega B Copy Camera Attachment

Catalog Number 429-062

The Omega B Copy Camera Attachment is designed to convert the enlarger into a copy stand using any standard 35mm single lens reflex camera body, and an Omega enlarging lens.

Copies can be made from original photographs, documents, stamps and so forth. Small objects such as flowers, insects, and coins can be easily photographed with the same versatility as more expensive macro camera lenses and attachments.

In addition, a Chromega B Dichroic lamphouse with its built-in continuously variable filtration and diffuse light* is ideally suited for making slide duplicates.

Adjusting the filtration of the lamphouse can color correct or dramatically change the entire mood of an otherwise unexciting slide. A complete assortment of black and white and color films in combination with imaginative camera techniques, such as multiple image exposures, allows you to create new slides or pictures out of old ones.

*3400°K

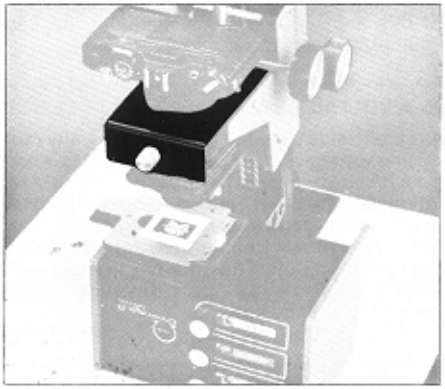

Black and White Printing

The superior evenness of illumination and the scratch, blemish, and dust suppression of the full diffusion Chromega B dichroic lamphouse is ideal for black and white printing, as well as for color materials. However, to obtain the same relative contrast as provided by a condenser lamphouse, one paper grade "harder" material is required (i.e., #3 rather than #2). The image sharpness will be the same, however, as it depends upon the enlarging lens and not the light source.

Variable contrast papers can be used successfully with the Chromega B, either by using under-the-lens filters (available from several manufacturers) or by dialing in variable contrast equivalencies using the filters built into the lamphouse. (The maximum equivalency is equal to approximately #3).

Variable Contrast Filter	Dichroic Filters
#1	35M/25Y
#1½	40M/20Y
#2	50M/15Y
#2½	100M/5Y
#3	150M/0Y

Lamp Replacement

Chromega B: Catalog Number 471-043 is a 75 watt quartz halogen lamp for the Chromega B Dichroic lamphouse. To replace the lamp, unplug the line cord from the supply, and allow the colorhead to cool. Remove the two knurled thumb screws which hold the top cover of the lamp holder housing and remove the cover. Push down on the lamp release lever with your finger. The lamp should lift free of the socket.

Handle the new lamp by the edge of the reflector ONLY, to avoid damage to the inside of the reflector. Also, do not touch the glass lamp envelope, since moisture from your fingers can etch the glass and lead to blackening and premature failure of the lamp.

Important Safeguards

When using your Omega Photographic products,
basic safety precautions should always be taken, including the following:

1. Read and understand all instructions provided with this product.
2. Close supervision is necessary when this product is used by or near children. Do not leave it unattended while it is plugged into an outlet.
3. Avoid touching the lamp area of enlargers or other hot parts as it may cause burns.
4. Do not operate this product if the power supply cord has been damaged or if the product has been dropped or damaged. Have it checked out and repaired if necessary by qualified service men before using.
5. Route the power supply cord away from hot areas. Do not let the cord hang over a counter edge or across an open area where people pass.
6. If an extension cord is necessary, use one with a suitable rating. Cords rated for less amperage than the product may overheat. Route the extension cord away from open areas where it may be tripped over or pulled.
7. Always unplug the product after use. Grasp the plug and firmly pull from the outlet to disconnect. Never yank the cord from the outlet.
8. Allow the product to cool to room temperature before storing. Wrap the power cord loosely around the product.
9. Do not immerse this product in water or other liquids.
10. To avoid electric shocks, do not attempt to disassemble or repair this product. Always have it serviced by qualified servicemen when necessary.

Incorrect reassembly can cause electric shock hazards.

These safeguards are prescribed by Underwriters Laboratories to be included in this instruction sheet for U.L. listed products. Some precautions may not apply to this product.

Save These Instructions

Omega®

The Greatest Name in Your Darkroom

Specifications subject to change without notice.

Omega Division

BERKEY MARKETING COMPANIES

25-20 Brooklyn-Queens Expwy. West, Woodside, NY 11377 ■ (212) 932-4040

1011 Chestnut Street, Burbank, California 91506 ■ (213) 843-1883

BERKEY PHOTO

9-183-0527 Issue 2

679OM578

Printed in U.S.A.